TANK WEIGHING MODULE (BSA-CTWE)

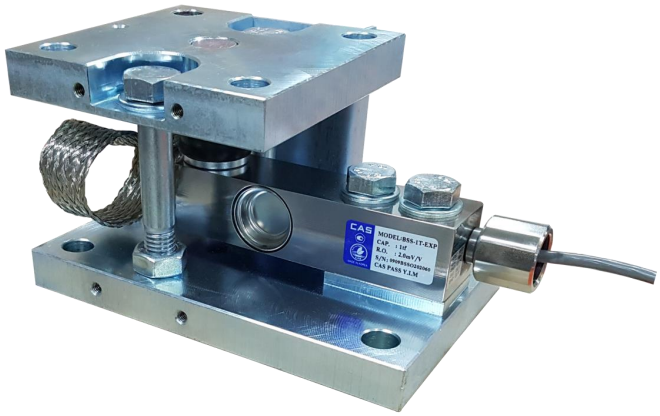

FEATURES

- Ball type
- High resolution
- Easy replacement

Material

- OP1 : Steel
- OP2 : Stainless steel

MANUAL

- Rise the Upper Plate by using the Supporters at both sides and join it with the Base plate
- Untie the upper bolt of the supporter and Place the upper ball cup over the steel Ball
- Check the level of the load cell

ORDER CODE

Material : Steel

BSA-CTWE(X)-XX

- XX: Zn : 아연도금 / Ni : 니켈도금
- (X): L : 250kg~2ton / H : 3ton~5ton

Material : Sus

BSS-CTWE(X)

- (X): L : 250kg~2ton / H : 3ton~5ton

DIMENSIONS

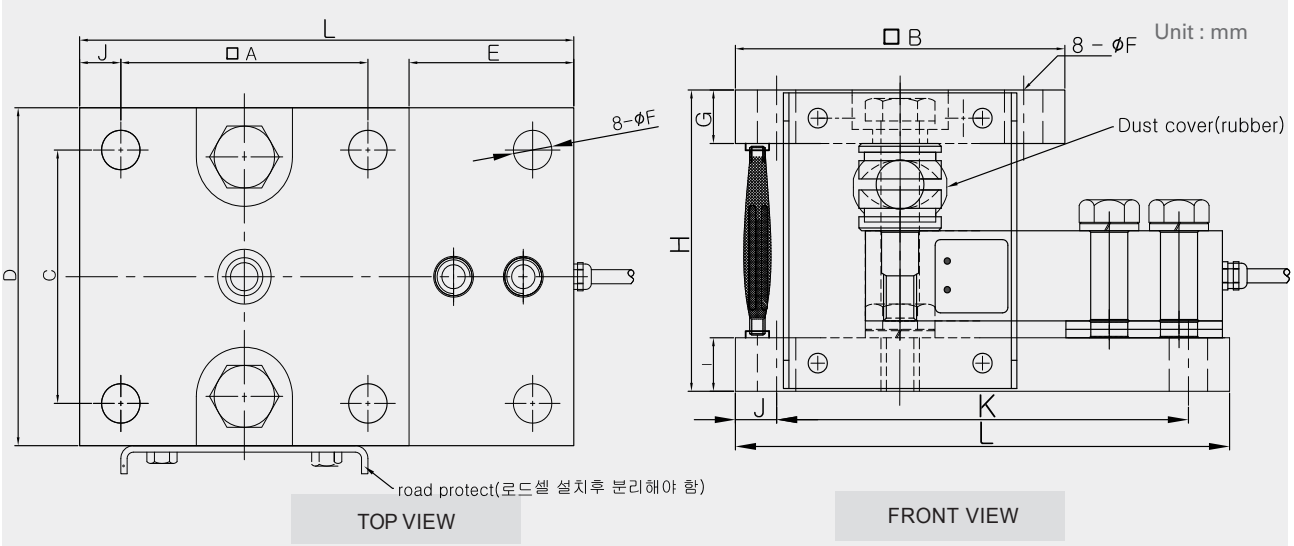

Capacity	A	B	C	D	E	F	G	H	I	J	K	L
250 kgf	90	120	90	120	60	14	19	107	19	15	150	180
500 kgf												
1 tf												
2 tf												
3 tf	110	150	110	150	80	18	25	135	30	20	190	230
5 tf												